**Changzhou Winpark Electronics Co., Ltd**
Address: 6th Floor of Tianan Industrial Village A plus, Xinbei, Changzhou 213022, China
Tel: 0086-519-85132277 Email: winpark@cnwinpark.com
Fax: 0086-519-85108252 Web: www.cnwinpark.com

# JSD Series Counting Controller

Thank you for using Winpark products. Please read this manual carefully before operating the controller and always keep it around you to make it available easily anytime.

**WARNING**

**Wire connection**

If failure or error of this instrument could result in a critical accident of the system, install an external protection circuit to prevent such an accident.

Choose fuse protection power supply wire and output wire to avoid strong current strike which may cause failure or damage to the controller.

**Power supply**

Please use the controller under rated power supply to avoid causing failure or damage to the controller.

Don't turn on thee power supply until all of the wiring is completed and checked again

**Using sites limitation**

Don't use this controller in the places subject to flammable or explosive gas to avoid cause fire.

Don't use this controller in dusty, corrosive and steam exhaust environment

Don't use this controller where there are strong shock and strike.

## □ General Electrical Data

| | |
|---|---|
| Voltage range | AC180V-240V |
| Working environment | Temperature: 0-50℃ |
| | Related humidity: 35%-85% |
| Power consumption | 2.5W |
| Measuring range | 0-999999 Meter (Length)<br>0-999999 Pcs (Number)<br>0-60000 Rpm (Rotational Speed) |
| Counting frequency | Under 1Hz, 1-20Hz or 20-3KHz |
| Saving type | Auto saving when disconnect power, storage time>10years |
| Input type | Contacts switch, proximity switch（NPN）, hall switch, photoelectric switch（NPN） |
| Output type | Relay contacts output, contact capacity: 250V AC/ 3A |
| Connection type | Terminals |

**□Product Model：**

JS □ □□□-□□□□□□-□□□□

(1) (2) (3)(4)(5)(6)(7)(8) (9)(10)(11)(12)

（1） Outer dimension（$mm^2$）： C：96×48×91； D:72×72×120

（2） design code： 100

（3）number of digital tubes： 4： 4 bit； 6： 6 bit

（4）number of lines： 0：1 line： 1：2 lines

（5）input type: 1:contacts switch; 2: proximity switch（NPN）;3:hall switch; 4:photoelectric switch（NPN）

（6）Output type： 1：Relay contacts output

（7）（8）working type:

00： upper line displays length, lower line is null, no relay output.

01： upper line displays line speed, lower line is null, no relay output.

02： upper line displays number, lower line displays AV1, With one set value.

03： upper line displays length, lower line displays AV1, With one set value.

04： upper line displays length, lower line displays AV2, With two set values.

05： upper line displays length, lower line displays line speed, With one set value.

06： upper line displays length, lower line displays line speed, With two set values.

07： upper line displays present speed, lower line displays upper limit speed, With two set values: upper limit and lower limit.

08： upper line displays present line speed, lower line displays upper limit line speed, With two set values: upper limit and lower limit.

09： upper line displays total number, lower line displays number in batch, With one set values.

10： upper line displays total number, lower line displays number in batch, With two set values.

11： upper line displays total number, lower line displays number in batch, With one set value for batch quantity and one set value for multiple number.

12： upper line displays number(meter), lower line is for setting, With two input ports: one for account signal, one for counting signal.

13：upper line displays number(meter), lower line display line speed.

14：upper line displays total number, lower line displays number in batch, With two set values and three outputs.

15：upper line displays number of batches, lower line displays number in batch, With one set value and one output.

16：upper line displays number of batches, lower line displays number in batch, With two set values and two outputs.

（9）Counting type： 0： increase type； 1： decrease type

（10）counting frequency： 0： 20Hz~~3KHz； 1： 1Hz~~20Hz； 2： below 1Hz

（11）the sequence of reset and delay of relay

0： no reset

1： out1: reset, then delay

2： out1: delay, then reset

4： out2: reset, then delay

5： out1 and out2: reset, then delay

6： out1: delay, then reset, out2: reset, then delay

8： out2: delay, then reset

9： out1: reset, then delay, out2: delay, then reset

10： out1 and out2: delay, then reset

（12）when relay is picked up, count or not.

0： count， 1： when out1 relay is picked up, don’t count

2： when out2 relay is picked up, don’t count

## □ Wiring Connection：

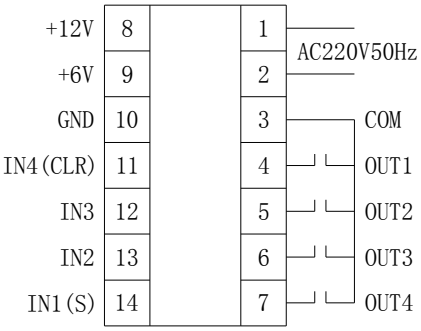


JSD

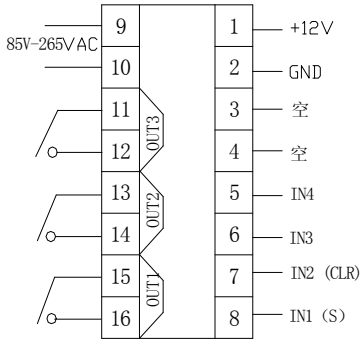


JSC

## □Manual explanation

### 1. Key explanation：

| | Press shortly | Hold for 5 seconds |
|---|---|---|
| SET | enter setting mode or to set next parameter | To shift in parameter layers |
| C | Reset lower line | Reset upper and lower line(except line speed.) |
| ＜ | shift set position in setting mode | null |
| △ | add 1 in setting mode | null |
| ▽ | minus 1 in setting mode | Recover all parameters to factory value |

### 2. Parameter explanation (totally 3 layers)

Parameters will be displayed in sequence as the below tables show when press SET key in each layer.

### 2.1 First layer parameter

Press SET key to set the following parameter:

| Sign | Name | Setting | Description |
|---|---|---|---|
| Av1 | Number in batch | To be set | Pulses number per liter in lower line |
| Av2 | Batch number | To be set | Liter number in upper line, when upper line reaches Av2, OUT2 outputs signal. |

### 2.2 Second layer parameter

When Code=0(default), hold SET key for 5 seconds to set the following parameter:

| Sign | Name | Setting range | Description |
|---|---|---|---|
| Lon1 | Step length | 0~999.9 | Set to 999.9 |
| Lon2 | Step length | 0~999.9 | Set to 0 |
| AFt1 | Delay number1 | -9999~9999 | Set to 0 |
| AFt2 | Delay number2 | -9999~9999 | Set to 0 |
| TiE1 | Duration for out1 | 0~999.9 | Set to 0 (the pick-up time of relay) |
| TiE2 | Duration for out2 | 0~999.9 | To be set (the pick-up time of relay) |
| TiE3 | Duration for out3 | 0~999.9 | Set to 0 (the pick-up time of relay) |
| Code | password | 0,1 | Set code=1 to enter third layer parameter by hold SET key for 5 seconds |

### 2.3 Third layer parameter

When Code=1, hold SET key for 5 seconds to set the following parameter:

| Sign | Name | Setting range | Description |
|---|---|---|---|
| Page | Working type | See attached table 1 | Set to 16 |
| Grad | Frequency adjust | 0: 20Hz~~3KHz, 1: 1Hz~~20Hz,<br>2: below1Hz | Set to 0 |
| Cell | reset | See attached table 2 | Set to 1 |
| COUN | When relay is connected, count or not | 0: count<br>1: when out1 relay is picked up, don't count<br>2: when out2 relay is picked up, don't count | Set to 0 |
| ADD | Counting by increase or decrease | 0: increase type<br>1: decrease type | Set to 0 |
| Code | password | 0, 1 | Set code=0 to enter second layer parameter by hold SET key for 5 seconds |

**Attached Tabel1: Working Type**

| **Working Type** | |
|---|---|
| PAGE=0 | upper line displays length, lower line is null, no relay output. |
| PAGE=1 | upper line displays line speed, lower line is null, no relay output. |
| PAGE=2 | upper line displays number, lower line displays AVl, With one set value. |
| PAGE=3 | upper line displays length, lower line displays AVl, With one set value. |
| PAGE=4 | upper line displays length, lower line displays AV2, With two set values. |
| PAGE=5 | upper line displays length, lower line displays line speed, With one set value. |
| PAGE=6 | upper line displays length, lower line displays line speed, With two set values. |
| PAGE=7 | upper line displays present speed, lower line displays upper limit speed, With two set values: upper limit and lower limit. |
| PAGE=8 | upper line displays present line speed, lower line displays upper limit line speed, With two set values: upper limit and lower limit. |
| PAGE=9 | upper line displays total number, lower line displays number in batch, With one set values |
| PAGE=10 | upper line displays total number, lower line displays number in batch, With two set values. |
| PAGE=11 | upper line displays total number, lower line displays number in batch, With one set value for batch quantity and one set value for multiple number. |
| PAGE=12 | upper line displays number(length), lower line is for setting, With two input ports: one for account signal, one for counting signal. |
| PAGE=13 | upper line displays number(length), lower line display line speed. |
| PAGE=14 | upper line displays total number, lower line displays number in batch, With two set values and three outputs. |
| PAGE=15 | upper line displays number of batches, lower line displays number in batch, With one set value and one output. |
| PAGE=16 | upper line displays number of batches, lower line displays number in batch, With two set values and two outputs. |

**Attached Tabel 2: Reset and delay.**

| | =0 | =1 | =2 | =4 | =5 | =6 | =8 | =9 | =10 |
|---|---|---|---|---|---|---|---|---|---|
| CELL | no reset | out1: delay, then reset | out1: delay, then reset | out2: reset, then delay | out1 and out2: reset, then delay | out1: delay, then reset, out2: reset, then delay | out2: delay, then reset | out1: reset, then delay, out2: delay, then reset | out1 and out2: delay, then reset |