GR818 Digital Temperature Controller

Operation Instruction V3. 02

WINPARK

Thank you for using Winpark GR818 digital temperature controller

This instruction describes product function, features and proper usage
Before using this controller, please pay special attention to issues below:

- User should master enough electric knowledge
- User must read and understand this instruction well for right usage
- Please consider applicability to system, machine and equipment
- Please note and observe the prohibition of this product
- The examples in this instruction or other data are only for user reference. No guarantee of a certain action.
- When using this controller with other products, please confirm whether it is in conformity with the relevant specifications, principles, etc..
- Please keep this instruction well to make it available easily anytime

Contact us: Changzhou Winpark Electronics Co., Ltd.
Add: F5th,Tian'an Industry Villiage A+,Xinbei ,Changzhou213022,China
Email: winpark@cnwinpark.com
Web: www.cnwinpark.com
Tel: 0519-85132277
Fax: 0519-85108252

A1 Content Index

A1	Content Index	B3	ALM alarm parameter define
A2	Warning	B4	ALM alarm output function define
	Notes	B5	Input type
A3	Electric Specificaiton	B6	Control method&sensor selection
A4	Model selection	B7	Status information(INFO)
A5	Outer dimension	B8	Error display explanation
	Installation size	C	System menu parameter
A6	GR818-A/GR818-D wiring	D	Button/menu operation
B1	GR818-B/GR818-E wiring		
B2	Panel funciton explanation		

A2

Warning

① To avoid electric shock, DON'T touch the AC power supply terminals after power on
② Before power on, please confirm voltage conformity in range of AC 85~265V, to avoid damage to controller
③ Never remove, retrofit or repair the product or contact any internal components
④ If the output relay exceeds its life span, the contacts may melt and burn.
⑤ Tighten screw with 0.74-0.90Nm torque, as loose screws may cause fire
⑥ Use appropriate fuse to ensure power supply line and input / output line to prevent current impact
⑦ Don't use the controller in occasion of flammable, explosive gas, discharge of steam

Note

① For heat radiation, leave space around the controller and do not jam the ventilation holes in the controller.
② Keep enough space between the controller and equipment which generates high frequency and surge
③ Connect wires correctly
④ Use the controller under rated load and power supply
⑤ Use standard grade of alcohol to clean the controller; don't use paint thinner or similar chemicals
⑥ Read and understand this instruction carefully before using the controller
⑦ Don't use the controller in case the front panel peels off or breaks

A3 Electric specification

rated voltage	85V-265V AC , 50/60HZ
power comsumption	≤5VA
working environment	Ambient temperature: 0C ~50C Relative humidity: 35%~85% (no condensation)
Storage temperature	-25℃-65℃（Avoid ice or dew）
Resolution	1℃，0.1℃（adjustable）
Wiring method	terminals
accuracy	±0.5%FS
Memory protection	Non-volatile memory（write times：1,000,000）
installation environment	Installation type II, pollution grade 2（IEC61010-1）
relay output	relay contacts AC220V/DC30V，3A（Resistive load）
logic level output	ON:DC12V; OFF: below DC0.5V; Max current: 30mA. Load resistance≥1K.

A4 Model selection

Model code explation

GR818 – □□□□□□□ – □□□□
①②③④⑤ ⑥ ⑦

① Panel size
A: 48*48 B: 48*96 D: 72*72 E: 96*96
② Input signal
T: Thermocouple/RTD input L: Voltage/current signal input(0-10V/0-20mA)
③ Main output
1: relay 2: logic level
3: analog（0-5V/0-10V/4-20mA） 4: SCR phase shift
5: SCR zero cross
④ Alarm output
1: 1 relay alarm output 2: 2 relay alarm outputs
3: 1 logic level alarm output and 1 relay alarm output
⑤ Strengthened funciton
0: No strengthened funcion 1: RS485 communication 2: current measure
3: RS485 communication+current measure
4: analog input channel2(0-10V/0-20mA)
⑥ Expension input output
00: no expension 22: 2 input 2 output
40: 4 input 04: 4 output
⑦ Funcion code

A5 Outer dimension and install hole size

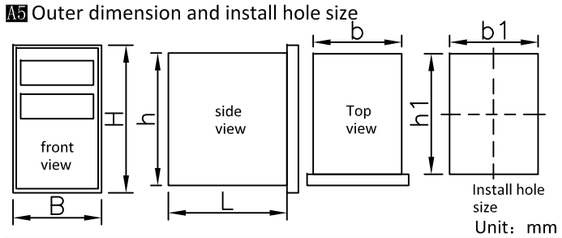

Unit：mm

Model	Panel siz H×B	case size h×b×L	install hole size h1×b1
GR818-A	48×48	44.56×44.56×79.00	(44.56+1)×(44.56+1)
GR818-B	96×48	91.00×44.56×79.00	(91.00+1)×(44.56+1)
GR818-D	72×72	67.00×66.80×79.00	(67.00+1)×(66.80+1)
GR818-E	96×96	91.00×90.50×79.00	(91.00+1)×(90.50+1)

Wiring

A6 GR818-A/GR818-D

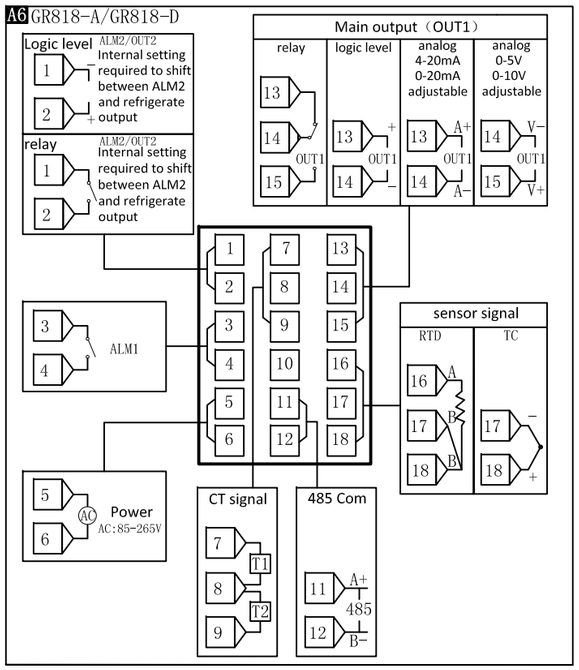

B1 GR818-B/GR818-E

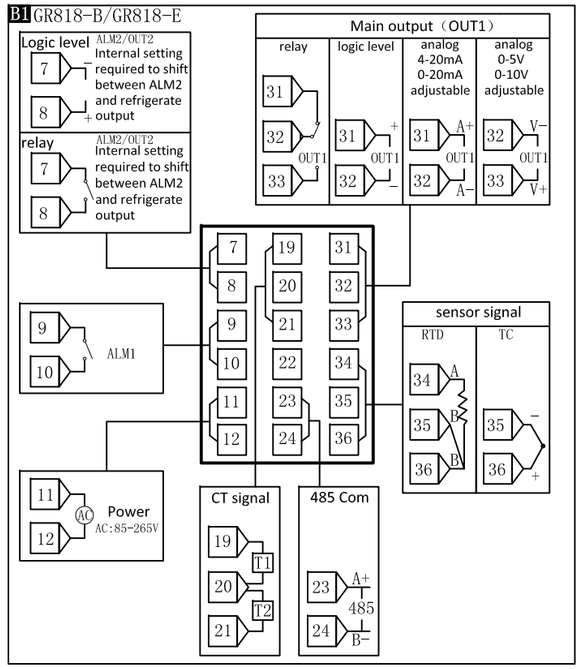

B2 Operation panel explanation

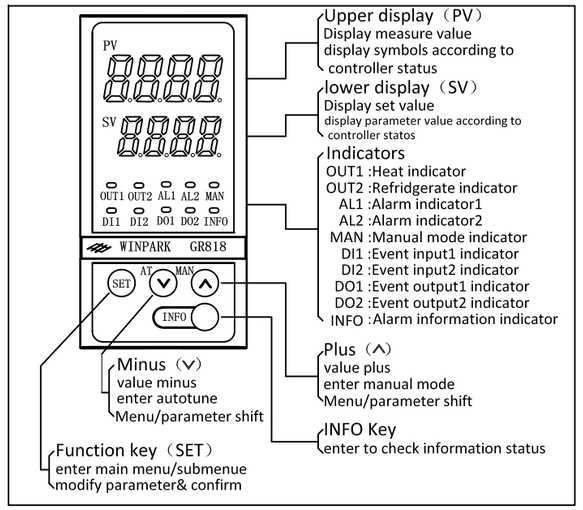

Alarm

B3 ALM alarm parameter define

Code	alarm name	Code	alarm name
0	No alarm	1	upper limit
2	lower limit	3	upper/lower limit
4	upper/lower limit range	5	upper limit (keep)
6	lower limit(keep)	7	upper/lower limit (keep)
8	upper/lower limit range (keep)	9	absolute value upper limit
10	absolute value upper limit	11	absolute value upper/lower limit
12	absolute value upper/lower range	13	absolute value upper limit (keep)
14	absolute vakeepl	15	absolute value upper/lower limit (keep)
16	absolute value lower limit range (keep)	17	upper limit reture difference
18	lower limit reture difference	19	absolute value upper limit reture difference
20	absolute value lower limit reture difference	21	upper limte reture difference (keep)
22	lower limit return difference (keep)	23	absolute value upper limite reture difference(keep)
24	absolute vale lower limit return difference(keep)		

B4 ALM alarm output function define

Code	alarm name	Code	alarm name
0	no configure	1	current measure NO/NC status
2	current measure NO status	3	current measure NC status
4	alarm output1（ALM1）	5	alarm output2（ALM2）
6	alarm output 3（ALM3）	7	heat output
8	refrigerate output	9	manual symbol
10	information alarm symbol		

B5 Input type

	Input type	input	Set code	
temperature input	thermocouple	K	𝑘	-200℃—1200℃
		E	𝐸	-200℃—650℃
		J	𝐽	-200℃—850℃
		S	𝑆	-50℃—1700℃
		B	𝑏	0℃—1800℃
		N	𝑛	-200℃—1300℃
		R	𝑟	-50℃—1700℃
		T	𝑡	-200℃—400℃
		W3-25	𝑢3	0℃—2300℃
		W5-26	𝑢5	0℃—2300℃
	RTD	PT100	𝑃𝑡	-200℃—850℃
		Cu50	𝐶𝑢	-50℃—150℃

B6 control method and sensor type selection

	Main menu	submenu	set code		code define
control method	tEMP	P-M1	P id		PID control
			P id2		two-way PID control (heat/refridgerate)
			bit		Step control
sensor type	tEMP	P-M2	TC	K、E、J、S	K、E、J、S
				B、N、R、T	B、N、R、T
				W3、W5	W3-25、W3-26
			RTD	Pt 、Cu	PT100、Cu50

B7 information status explanation

INFO information status table			
Code	Code define	Code	Code define
F. 100	currnet value measured	F. 101	manual output value
F. 102	maintain output value	F. 103	temperature control output value
F. 104	cold end temperature (room temperature)	F. 200	total curent value of channel 1
F. 201	total curent value of channel2	F. 202	Min current per single wire
F. 203	temperature resistor value (RTD)	F. 204	temperature voltage value(TC)
F. 300	MODBUS Baud rate	F. 301	MODBUS station number
F. 302	RS485 communication status	F. 303	USB port communication status
F. 304	Phase shift board communication status	F. 400	controller working days
F. 401	relay output times	F. 900	producing date: year
F. 901	producing date: month	F. 902	producing date: day
F. 903	menu table version	F. 904	system software version
F. 905	user customize version		

B8 Error display explanation

Error code table			
Error display	code explanation	Troubleshooting	Remark
Err0	exceed AD input upper limit	check if thermocouple is disconnected	PV display tube flashes
Err1	exceed AD input lower limit	Check if analog input is connected reversedly	
Err2	RTD Break	check if RTD is disconnected	
Err3	exceed measure range upper limit	check if the used sensor type is in accordance with setting	
Err4	exceed measure range lower limit	check if the used sensor type is in accordance with setting	
Err5	exceed set value upper limit	check if the SV upper limit is too small	
Err6	exceed set value lower limit	check if the SV upper limit is too big	
Err7	room temperature error	Controller malfunction, please contact supplier for service.	
Err8	thermocouple connect reversed	check if thermocouple is connected reversedly	
F. 001	control cycle set vaule conflict	set reasonable control cycle	INFO indicator flashes, press INFO key to checkdetails
F. 002	output breaks	check if heating circuitbreaks	
F. 003	output adheres	check if heat circuit has unnormal NC parts	
F. 004	relay output reaches set times	change controller	
F. 005	working temperature exceed	check if temperature in cabinet is too high	

C Menu display explanation

main menu		submenu			menu define	Add
1	P id (PID) basic control parameter	1-1	P	P	Proportional band	W211
		1-2	I	I	Integral time	W212
		1-3	d	D	Derivative time	W213
		1-4	it	IT	Overshooting restrain	W214
		1-5	Ht	HT	heat cycle	W215
		1-6	Ct	CT	refrigerate cycle	W216
		1-7	HHYS	HHYS	heat return difference	W204
		1-8	At	AT	Autotune switch	W206
2	P id2 (PID2) main control parameter	2-1	Obj	OBJ	control model	W210
		2-2	PC	PC	refrigerate P	W217
		2-3	IC	IC	refrigerate I	W225
		2-4	dC	DC	refrigerate D	W226
		2-5	CPK	CPK	Refrigerate power coefficient	W224
		2-6	rUCY	RUCY	valve stroke time	W151
		2-7	bd	BD	dead zone value	W203
		2-8	INOS	INOS	Overshoot suppression factor	W208
		2-9	LEv	LEV	Control intensity coefficient	W209
		2-10	CPO	CPO	Proportional refrigeration displacement	W218
		2-11	t-on	T-ON	Min boot time	W219
		2-12	t-oF	T-OF	Min shutdown time	W220
		2-13	oMAx	OMAX	max output value limit	W221
		2-14	oMin	OMIN	min output value limit	W222
		2-15	dMAx	DMAX	Output variationlimit	W223
3	tEMP (TEMP) temperature measure	3-1	P-N1	P-N1	Control method	W201
		3-2	P-N2	P-N2	input type *1	W133
		3-3	tr	TR	input compensation *1	W136
		3-4	P-dP	P-DP	display accuracy *1	W138
		3-5	P-CF	P-CF	Fahrenheit *1	W137
		3-6	P-N2	P-N2	Input type *2	W150
		3-7	d-Md	D-MD	compensation type *2	W118
		3-8	d-iH	D-iH	filter input high point *2	W119
		3-9	d-iL	D-iL	filter input low point *2	W120
		3-10	d-oH	D-oH	filter output high point *2	W121
		3-11	d-oL	D-oL	filter onput low point *2	W122
		3-12	P-SH	P-SH	set upper limit	W134
		3-13	P-SL	P-SL	set lower limit	W135
		3-14	FiT	FiT	temperature process	
		3-14-1	C-Fd	(C-MD) temperature filter type		W115
		3-14-2	COP1	(COP1) filter parameter1		W116
		3-14-3	COP2	(COP2) filter parameter2		W117
		3-14-4	d-Md	(D-MD) compensation type		W118
		3-14-5	d-iH	(D-iH) filter input high point		W119
		3-14-6	d-iL	(D-iL) filter input low point		W120
		3-14-7	d-oH	(D-oH) filter output high point		W121
		3-14-8	d-oL	(D-oL) filter output lowh point		W122
4	ALn (ALM) alarm configure	4-1	ALn1	ALM1	alarm type1	W180
		4-2	AH1	AH1	alarm upper limit 1	W181
		4-3	AL1	AL1	alarm lower limit1	W182
		4-4	AOP1	AOP1	alarm option1	W183
		4-5	ALn2	ALM2	alarm type 2	W184
		4-6	AH2	AH2	alarm upper limit 2	W185
		4-7	AL2	AL2	alarm lower limit2	W186
		4-8	AOP2	AOP2	alarm option2	W187
		4-9	ALn3	ALM3	alarm type3	W188
		4-10	AH3	AH3	alarm upper limit3	W189
		4-11	AL3	AL3	alarm lower limit 3	W190
		4-12	AOP3	AOP3	alarm option 3	W191

main menu		submenu			menu define	Add
5	Suc (SVC) multi stage temperature control (programmable conroller parameter)	5-1	nodE	MODE	multistage control mode	W142
		5-2	S-id	S-ID	multistage control number	W141
		5-3	Su	SV	set temperature	W131
		5-4	t-St	T-ST	Heating time	W139
		5-5	J-Su	J-SV	Energy saving temperature	W512
		5-6	J-tn	J-TM	Energy saving delay time	W502
6	ou (MV) output control	6-1	AOMd	AOMD	analog output mode	W126
		6-2	AOPZ	AOPZ	analog output configure	W127
		6-3	AOH	AOH	Analog output transmission high point	W128
		6-4	AOL	AOL	Analog output transmission low point	W129
		6-5	M-Su	M-SW	control mode (manual/auto)	W171
		6-6	MAn	MAN	manual output value	W170
		6-7	E-ou	E-MV	error output value	W172
		6-8	K-Su	K-SW	maintain switch	W174
		6-9	K-tn	K-TM	maintain judge time	W175
		6-10	K-PC	K-PC	maintain judge deviation range	W176
		6-11	K-Mu	K-MV	maintain valve *3	W173
		6-12	K-Ct	K-CT	maintain count value *3	W177
7	CUrr (CURR) transformer current	7-1	SEt	SET	total current measure switch	W270
		7-2	ONE	ONE	min single current	W263
		7-3	CH1	CH1	current save-channel 1	W264
		7-4	CH2	CH2	current save-channel 2	W265
		7-5	dSP	DSP	current display	
			7-5-1	C-Cd	(C-MD) current measure mode	W262
			7-5-2	C-Su	(C-SW) current display switch	W937
			7-5-3	C-Fn	(C-FM) transformer denominator	W260
			7-5-4	C-Fz	(C-FZ) transformer numerator	W261
			7-5-5	Ct	(CT)real time total current *3	W253
			7-5-6	Ct1	(CT1) real time current1 *3	W254
			7-5-7	Ct2	(CT2) real time current2 *3	W255
			7-5-8	KP	(KP) keep total current(2sec) *3	W257
			7-5-9	KP1	(KP1) keep current1 *3	W258
			7-5-10	KP2	(KP2) keep current2 *3	W259
			7-5-11	KEEP	(KEEP) keep total current(long term) *3	W256
8	SYS (SYS) system configure	8-1	bAUd	BAUD	MODBUS baud rate	W900
		8-2	PCOL	PCOL	MODBUS station No.	W901
		8-3	bri	BRI	brightness	W936
		8-4	r-Su	R-SW	relay detect switch *4	W123
		8-5	r-JS	R-JS	relay times *4	W125
		8-6	run	RUN	running time *3	W908
		8-7	InFo	INFO	system information	
			8-7-1	Hd1	(HD1) Hardware type1 *3	W919
			8-7-2	Hd2	(HD2) Hardware type2 *3	W920
			8-7-3	Hd3	(HD3) Hardware type3 *3	W921
			8-7-4	Hd4	(HD4) Hardware type4 *3	W922
			8-7-5	YEAr	(YEAR) producing year *3	W909
			8-7-6	Mon	(MON) producing month *3	W910
			8-7-7	dAy	(DAY) producing day *3	W911
			8-7-8	HOUr	(HOUR) producing hour *3	W912
			8-7-9	Min	(MIN) producing min *3	W913
			8-7-10	SEC	(SEC) producing sec *3	W914
			8-7-11	Pid	(PID) control base version *3	W924
9	dEF	(DEF) parameter default				
10	Lock	(LOCK) 0-lock data 1-unlock basic data 8888-unlock all data				
label		"*1"display with temperature input "*3"parameter read only				
		"*2"display with analog input "*4"OUT1 display with relay output				
Modbus		Format:data bit 8, stop bit 1, even parity，all in decimal system				
		Common address:PV-W130,SV-W131,Heah indicator-B224,Autotune-B3296				

D Operation guide

- Temperature setting

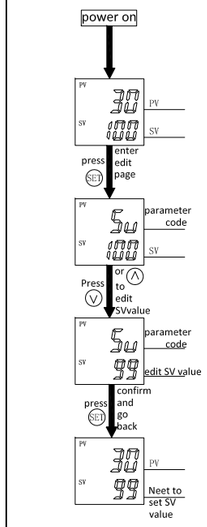

- Autotune(AT)

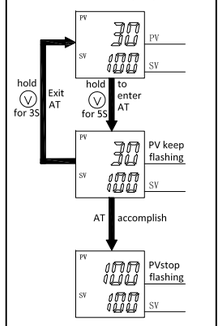

- Manual output(MAN)

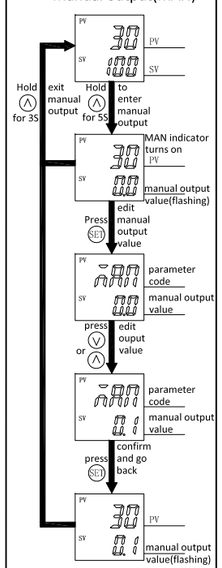

- Check information stauts（INFO）

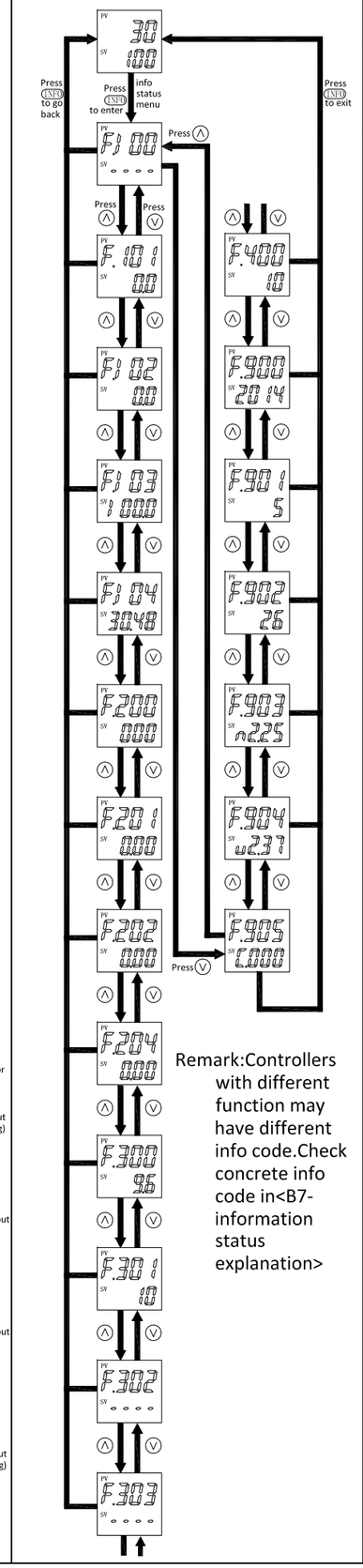

Remark:Controllers with different function may have different info code.Check concrete info code in<B7-information status explanation>

- System parameter setting

edit value：press SET the last bit flashes, press ∧∨ to set parameter value to target, then press SET to confirm

locked：

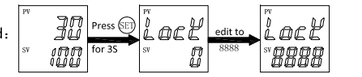

Unlocked：

Remark:Controllers with different function may have different parameters unlocked.Check concrete menu explanation in<C-Menu display explanation>

